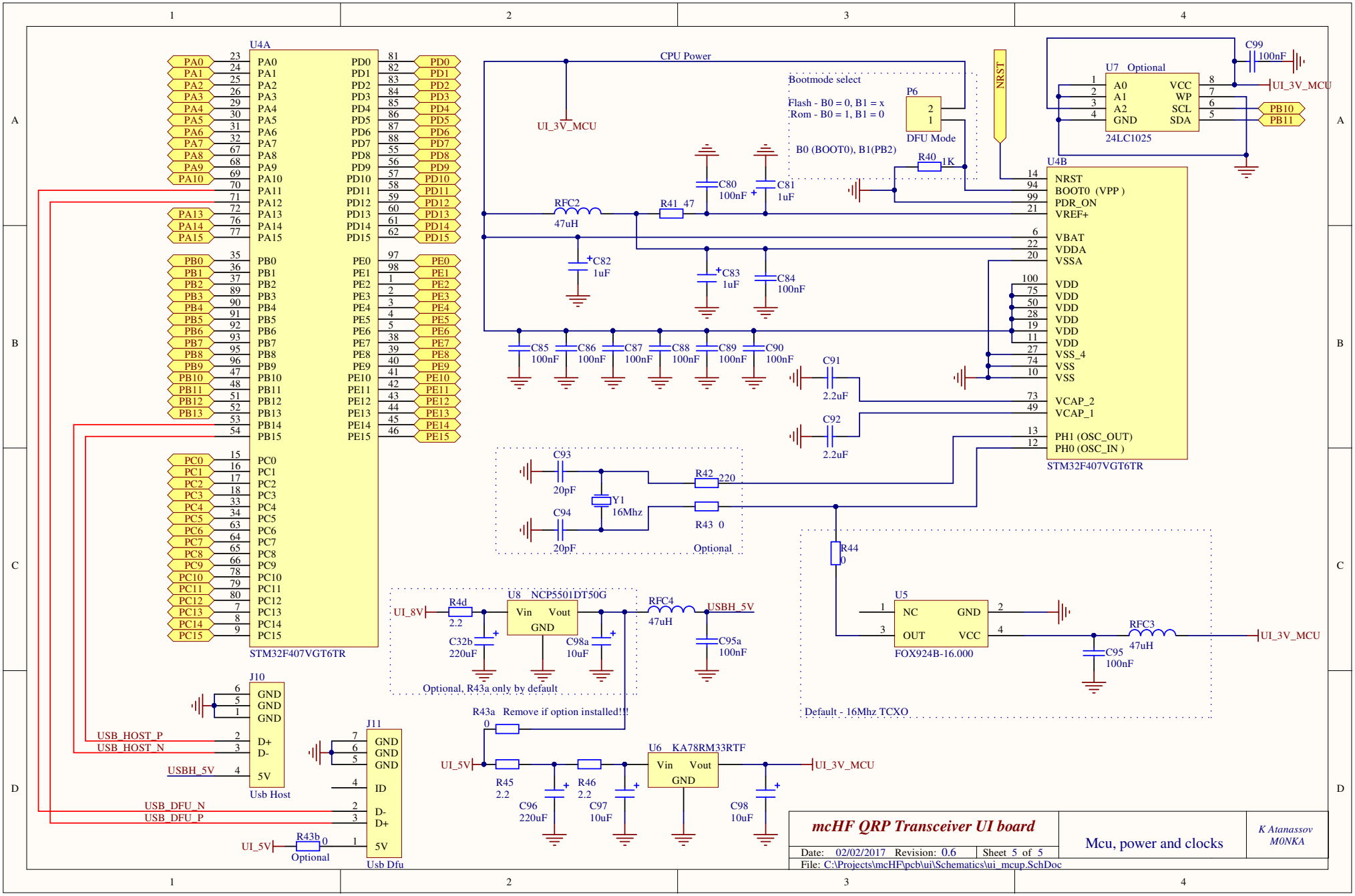
U4A
STM32F407VGT6TR
CPU Power
UI_3V_MCU
Bootmode select
Flash - B0 = 0, B1 = x
Rom - B0 = 1, B1 = 0
P6
DFU Mode
B0 (BOOT0), B1(PB2)
R40 1K
NRST
U7 Optional
24LC1025
C99 100nF
PB10
PB11
U4B
NRST
BOOT0 (VPP)
PDR_ON
VREF+
VBAT
VDDA
VSSA
VDD
VSS_4
VSS
VCAP_2
VCAP_1
PH1 (OSC_OUT)
PH0 (OSC_IN)
STM32F407VGT6TR
RFC2 47uH
R41 47
C80 100nF
C81 1uF
C82 1uF
C83 1uF
C84 100nF
C85 100nF
C86 100nF
C87 100nF
C88 100nF
C89 100nF
C90 100nF
C91 2.2uF
C92 2.2uF
C93 20pF
C94 20pF
Y1 16Mhz
R42 220
R43 0
Optional
R44 0
U5
NC
GND
OUT
VCC
FOX924B-16.000
RFC3 47uH
C95 100nF
Default - 16Mhz TCXO
U8 NCP5501DT50G
UI_8V
R4d 2.2
Vin
Vout
GND
C32b 220uF
C98a 10uF
RFC4 47uH
USBH_5V
C95a 100nF
Optional, R43a only by default
R43a Remove if option installed!!!
0
UI_5V
R45 2.2
R46 2.2
C96 220uF
C97 10uF
U6 KA78RM33RTF
C98 10uF
J10
GND
D+
D-
5V
Usb Host
USB_HOST_P
USB_HOST_N
USBH_5V
J11
ID
USB_DFU_N
USB_DFU_P
R43b 0
Optional
Usb Dfu
mcHF QRP Transceiver UI board
Mcu, power and clocks
K Atanassov
M0NKA
Date: 02/02/2017 Revision: 0.6
Sheet 5 of 5
File: C:\Projects\mcHF\pcb\ui\Schematics\ui_mcup.SchDoc